客户图
Drawings for customers

未注公差参照/General tolerances according to(mm): ISO2768-1 C							
>0.5~3	>3~6	>6~30	>30~120	>120~400	>400~1000	>1000~2000	>2000~4000
±0.2	±0.3	±0.5	±0.8	±1.2	±2	±3	±4

名称 Name	2芯1800-90度插头总成CodeA 2PIN1800-90deg Plug Assy-CodeA	2芯1800-90度插头总成CodeB 2PIN1800-90deg Plug Assy-CodeB	2芯1800-90度插头总成CodeC 2PIN1800-90deg Plug Assy-CodeC	2芯1800-90度插头总成CodeD 2PIN1800-90deg Plug Assy-CodeD
键位 Code	A	B	C	D
型号 Type	DBYB-02AX8-WXX	DBYB-02BX8-WXX	DBYB-02CX8-WXX	DBYB-02DX8-WXX
键位示意图 Different code view	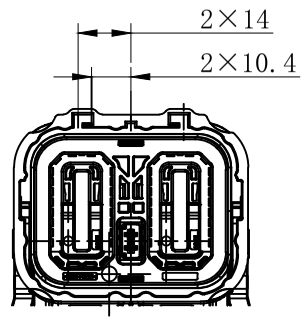	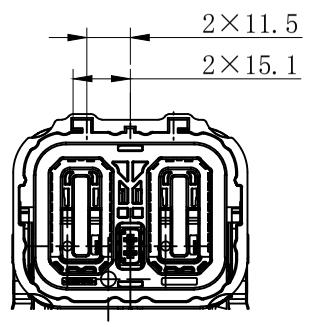	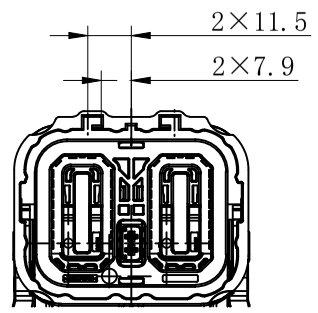	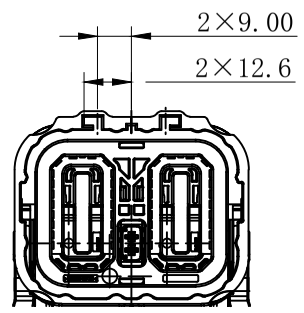
对插键位 Matching code	DBYR-02AX8-S70 (2芯1800-插座总成 CodeA)	DBYR-02BX8-S70 (2芯1800-插座总成 CodeB)	DBYR-02CX8-S70 (2芯1800-插座总成 CodeC)	DBYR-02DX8-S70 (2芯1800-插座总成 CodeD)

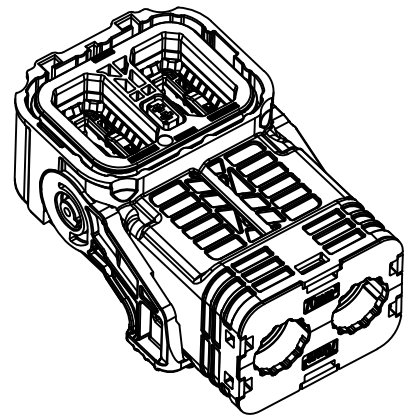

成品图
Product view

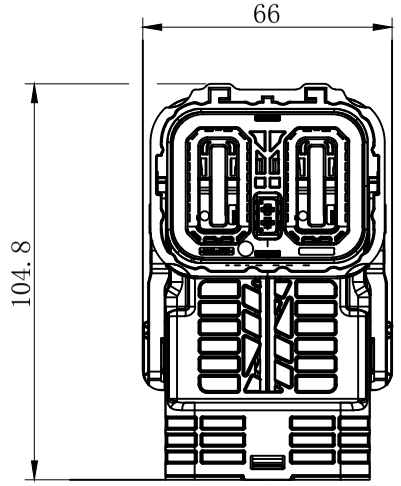

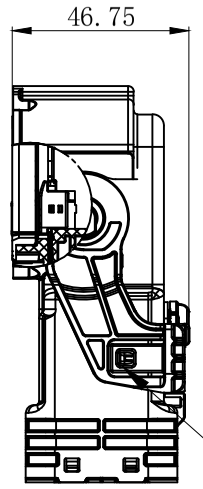

助力机构：锁止位置
Level:locking position

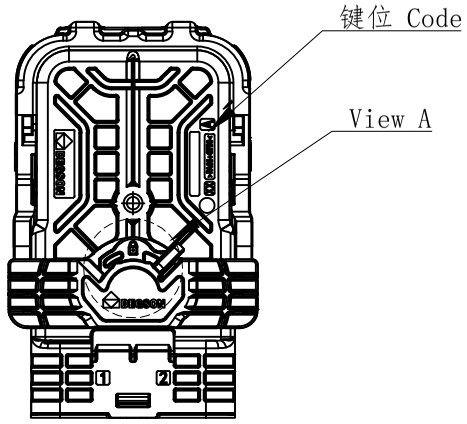

CPA：锁止位置图标
CPA:Lock position icon

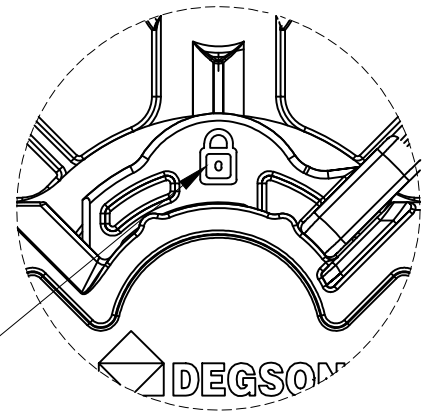

View A
4:1

技术要求 Technical specification:

1、性能参数 Performance parameter:

a、工作温度 Temperature Range: -40℃~125℃

b、额定工作电压 Working Voltage: 1000V DC

c、额定工作电流 Current Capability:

130A Max@25mm^2 200A Max@35mm^2

250A Max@50mm^2 280A Max@70mm^2

d、工作海拔 Altitude: 5000M

e、绝缘电阻 Insulation resistance: ＞200MΩ 1000V DC

f、耐电压 Withstand voltage: <5mA 1min 3000V AC

g、防护等级 Class of protection: IP68、IP6K9K、IPXXB

★ 2、法律法规 Laws and regulations

a、阻燃等级 Flame retardant rating: UL94 V0

b、环保要求 Environmental protection requirement: RoHS 2.0

REV	ECN	DESCRIPTION	DRFT	DATE
00	/	图纸首发/First edition drawing	欧霖	2024-07-26
图纸版本	ECN	变更描述	设计人	设计日期

DEGSON

批准/APPD	梁东	2024.07.26
审核/CHKD	李京乐	2024.07.26
制图/DRFT	欧霖	2024.07.26

A3 mm inch

材料/MATERIAL: / 表面效果/SURFACE: /

料号/PN:26040000041 样品状态/MAT STATUS:批量/Quantity production

名称/NAME: 2芯1800-90度插头总成 2PIN1800-90deg Plug Assy

版本/REV	类型/TYPE	图纸状态/DRAWING STATUS	比例/SCALE	页数/SHEET
00	客户图纸/Customer drawing	/	1:2	1/2

Transfer or duplication of this document as well as the utilization or communication of its contents are prohibited unless explicit authorization is granted. Violations will be liable for compensation. All rights reserved for patent, utility model or designs registrations. 除非经予明确授权，否则禁止转让、复制、利用、交流本文件的内容，侵犯者将负赔偿责任。本公司保留对涉及发明、实用新型和外观专利的所有权利。

客户图
Drawings for customers

型号/料号 Type/PN	物料描述 Product description / 子零件BOM Component BOM	26040000146	26040000137	26040000138	26040000139	26040000140	26040000141	26040000142	26040000143	26040000144	26040000145	26040000120	26040000121	26040000122	26040000123	26040000124	26040000125	26040000126	26040000127	26040000128	26040000129	26040000130	26040000131	适用线缆外径 Applicable cable diameter (mm)	备注 Note
DBYB-02DX8-W70 26040000032	70mm², CodeD、Shielded connector	1	-	-	-	1	2	-	-	-	2	-	-	-	2	-	-	-	2	-	-	-	2	17.8±0.4	
DBYB-02CX8-W70 26040000031	70mm², CodeC、Shielded connector	1	-	-	1	-	2	-	-	-	2	-	-	-	2	-	-	-	2	-	-	-	2	17.8±0.4	
DBYB-02BX8-W70 26040000030	70mm², CodeB、Shielded connector	1	-	1	-	-	2	-	-	-	2	-	-	-	2	-	-	-	2	-	-	-	2	17.8±0.4	
DBYB-02AX8-W70 26040000048	70mm², CodeA、Shielded connector	1	1	-	-	-	2	-	-	-	2	-	-	-	2	-	-	-	2	-	-	-	2	17.8±0.4	
DBYB-02DX8-W50 26040000036	50mm², CodeD、Shielded connector	1	-	-	-	1	2	-	-	2	-	-	-	2	-	-	-	2	-	-	-	2	-	15.5±0.3	
DBYB-02CX8-W50 26040000035	50mm², CodeC、Shielded connector	1	-	-	1	-	2	-	-	2	-	-	-	2	-	-	-	2	-	-	-	2	-	15.5±0.3	
DBYB-02BX8-W50 26040000034	50mm², CodeB、Shielded connector	1	-	1	-	-	2	-	-	2	-	-	-	2	-	-	-	2	-	-	-	2	-	15.5±0.3	
DBYB-02AX8-W50 26040000033	50mm², CodeA、Shielded connector	1	1	-	-	-	2	-	-	2	-	-	-	2	-	-	-	2	-	-	-	2	-	15.5±0.3	
DBYB-02DX8-W35 26040000040	35mm², CodeD、Shielded connector	1	-	-	-	1	2	-	2	-	-	-	2	-	-	-	2	-	-	-	2	-	-	14.1±0.3	
DBYB-02CX8-W35 26040000039	35mm², CodeC、Shielded connector	1	-	-	1	-	2	-	2	-	-	-	2	-	-	-	2	-	-	-	2	-	-	14.1±0.3	
DBYB-02BX8-W35 26040000038	35mm², CodeB、Shielded connector	1	-	1	-	-	2	-	2	-	-	-	2	-	-	-	2	-	-	-	2	-	-	14.1±0.3	
DBYB-02AX8-W35 26040000037	35mm², CodeA、Shielded connector	1	1	-	-	-	2	-	2	-	-	-	2	-	-	-	2	-	-	-	2	-	-	14.1±0.3	
DBYB-02DX8-W25 26040000044	25mm², CodeD、Shielded connector	1	-	-	-	1	2	2	-	-	-	2	-	-	-	2	-	-	-	2	-	-	-	11.9±0.3	
DBYB-02CX8-W25 26040000043	25mm², CodeC、Shielded connector	1	-	-	1	-	2	2	-	-	-	2	-	-	-	2	-	-	-	2	-	-	-	11.9±0.3	
DBYB-02BX8-W25 26040000042	25mm², CodeB、Shielded connector	1	-	1	-	-	2	2	-	-	-	2	-	-	-	2	-	-	-	2	-	-	-	11.9±0.3	
DBYB-02AX8-W25 26040000041	25mm², CodeA、Shielded connector	1	1	-	-	-	2	2	-	-	-	2	-	-	-	2	-	-	-	2	-	-	-	11.9±0.3	
		插头防尘盖 Plug dust cover	CodeA	CodeB	CodeC	CodeD	90度插头端子总成 90deg plug terminal assy	25sqmm	35sqmm	50sqmm	70sqmm	25sqmm	35sqmm	50sqmm	70sqmm	25sqmm	35sqmm	50sqmm	70sqmm	25sqmm	35sqmm	50sqmm	70sqmm		
			90度插头壳体总成 90deg plug housing assy					90度插头屏蔽外环 90deg outer ferrule				屏蔽内环 Inner ferrule				线缆密封圈 Cable seal				尾盖 Cap					
		No.1	No.2				No.3	No.4				No.5				No.6				No.7					

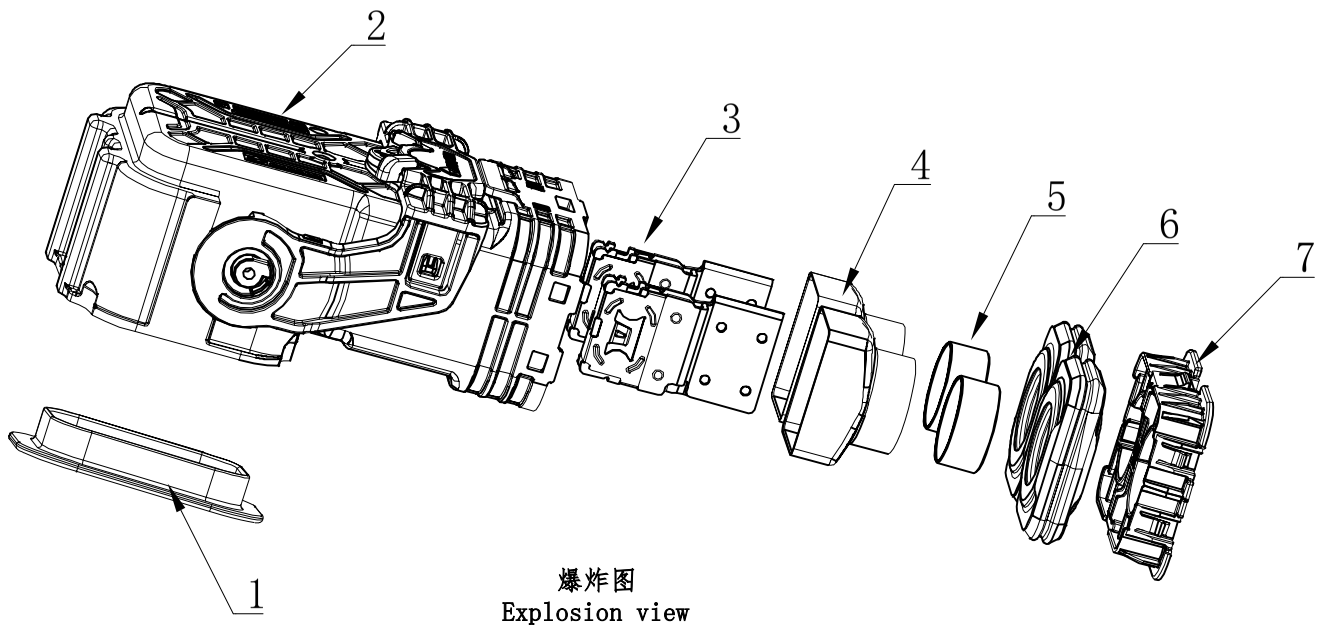

爆炸图
Explosion view

注意 Note:

1、线缆尺寸标准来源于LV216，如线缆直径与LV216的不一致，可能会引起装配困难或密封失效；

1、The cable dimensions are provided by the LV216. If the cable diameter is different from the LV216, assembly difficulties or seal failures may occur;

2、每横排为装配一套产品所需要的数量。可按最左列成品料号购买，也可单独按子零件料号购买子零件。

2、Each row is the number required to assemble a set of products. It can be purchased by the finished part number in the leftmost column, or it can be purchased separately by the part number of the sub-part.

REV	ECN	DESCRIPTION	DRFT	DATE
00	/	图纸首发/First edition drawing	欧霖	2024-07-26
图纸版本	ECN	变更描述	设计人	设计日期

DEGSON

批准/APPD	梁东	2024.07.26
审核/CHKD	李京乐	2024.07.26
制图/DRFT	欧霖	2024.07.26

A3 mm inch

材料/MATERIAL: /
表面效果/SURFACE: /
料号/PN:26040000041
样品状态/MAT STATUS:批量/Quantity production
名称/NAME: 2芯1800-90度插头总成 2PIN1800-90deg Plug Assy

版本/REV	类型/TYPE	图纸状态/DRAWING STATUS	比例/SCALE	页数/SHEET
00	客户图纸/Customer drawing	/	1:2	2/2

Transfer or duplication of this document as well as the utilization or communication of its contents are prohibited unless explicit authorization is granted. Violations will be liable for compensation. All rights reserved for patent, utility model or designs registrations. 除非被予明确授权，否则禁止转让、复制、利用、交流本文件的内容，侵犯者将负赔偿责任，本公司保留对专利、实用新型或外观专利的所有权利。